BERT Explained

LSTM Vs Transformer

Transformer

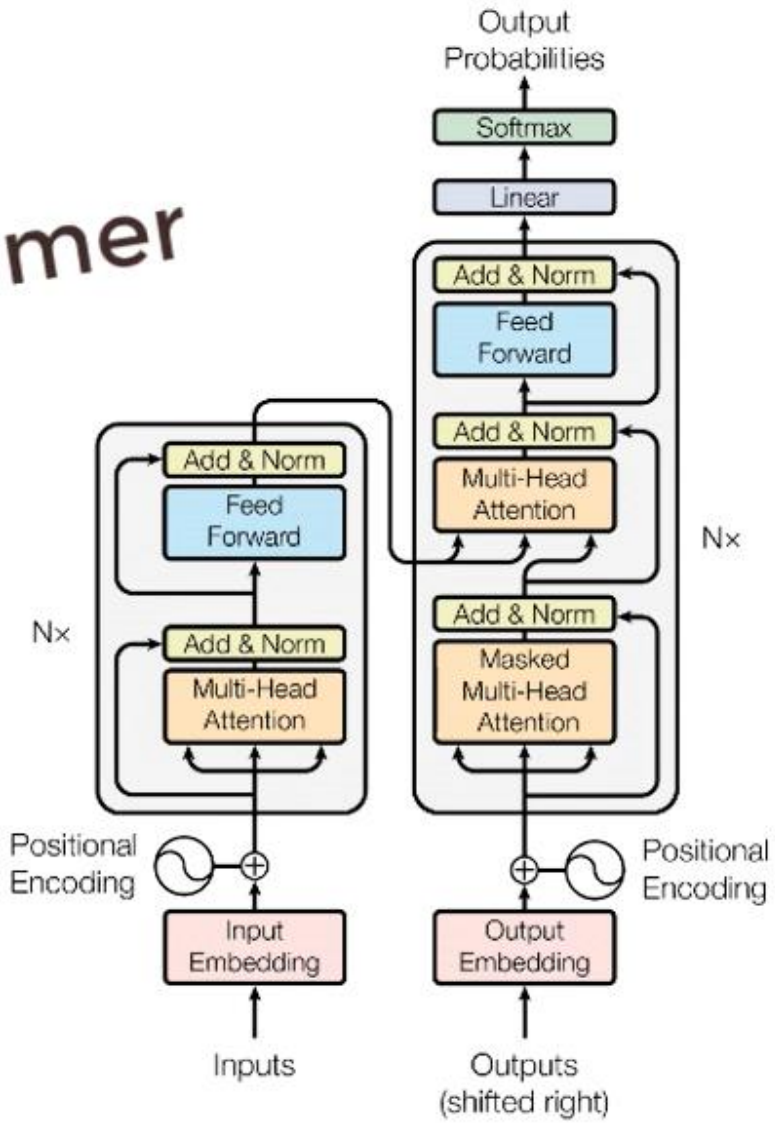

Source: Attention is All you Need (Vaswani et al., 2017)

LSTM Vs Transformer

LSTM Networks

1. Slow

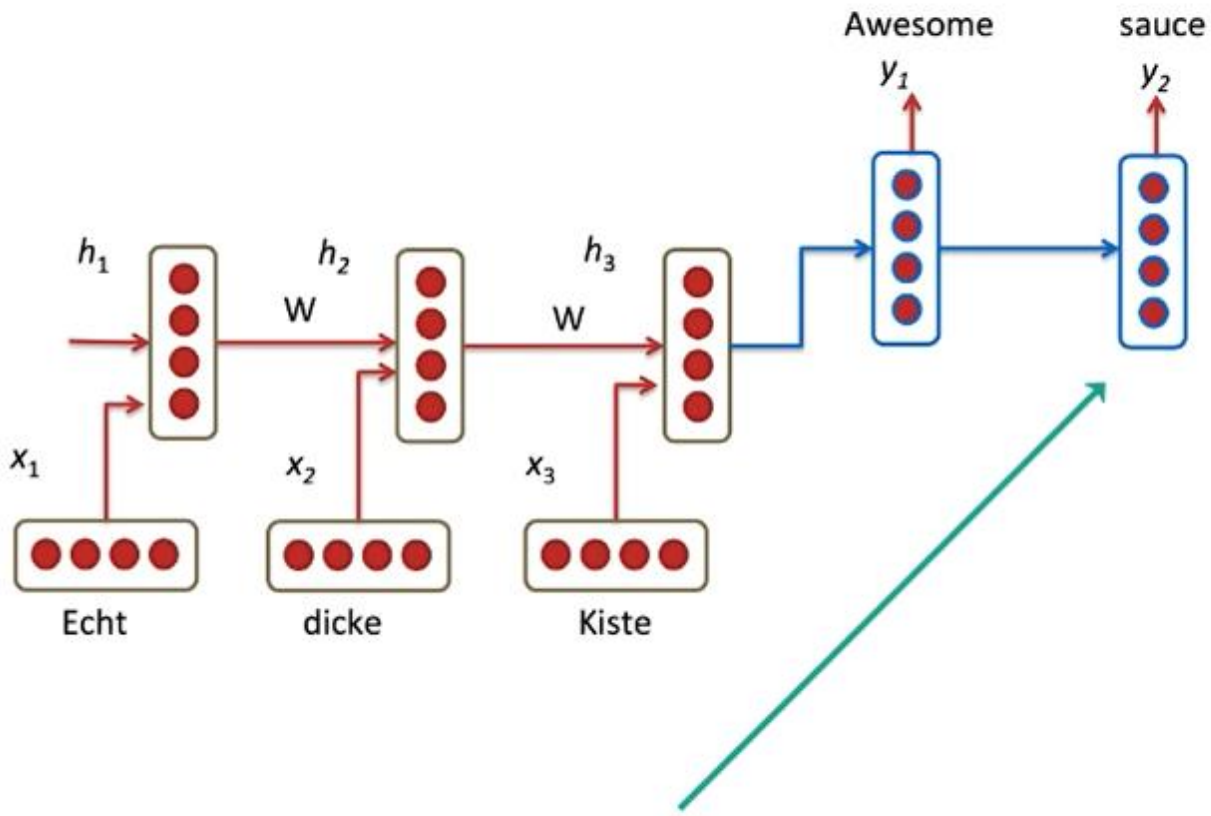

Timestep 5

LSTM Vs Transformer

LSTM Networks

1. Slow
2. Not truly Bidirectional

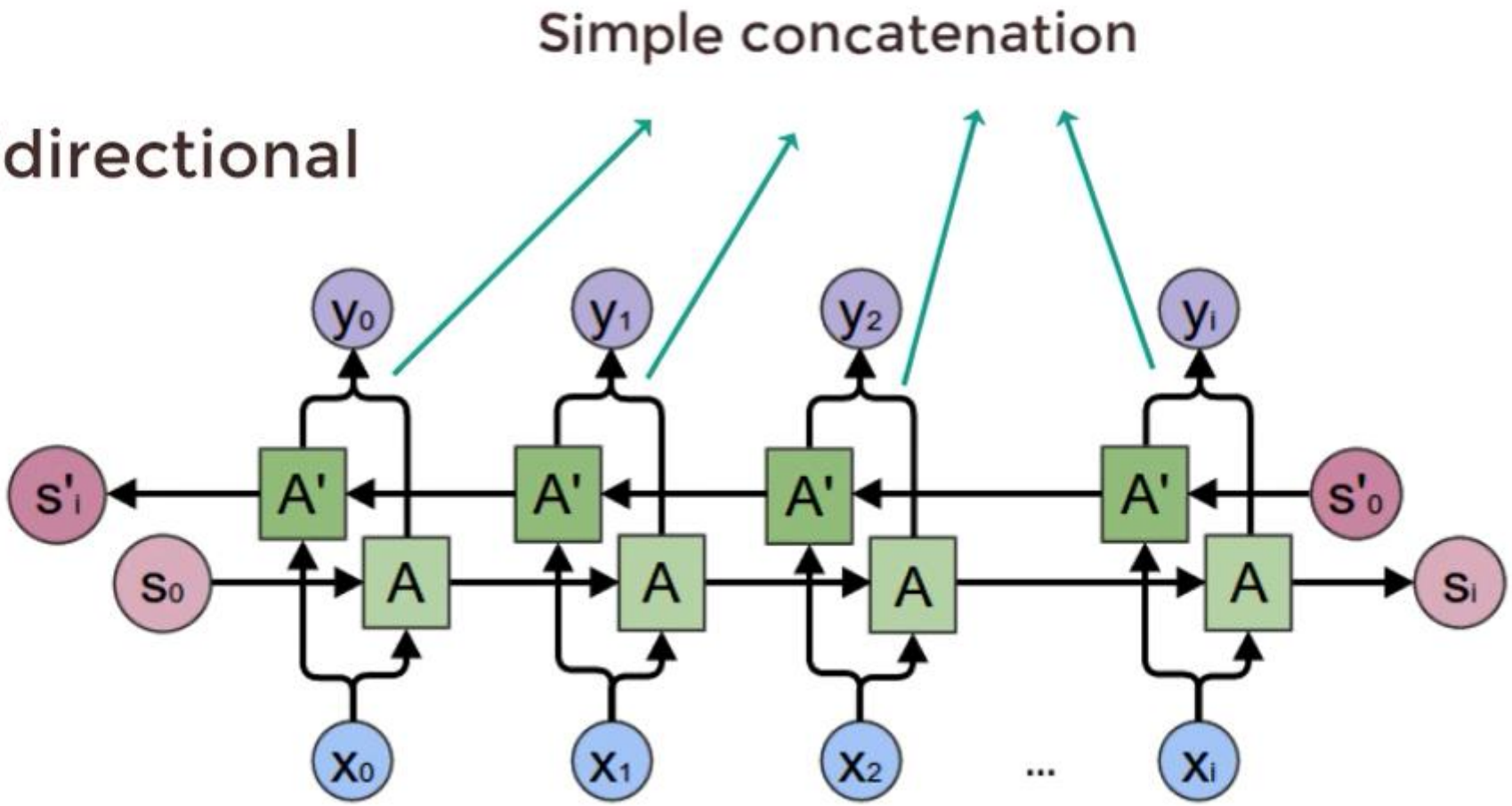

LSTM Vs Transformer

Transformer

1. ~~Slow~~ Faster

2. ~~Not truly Bidirectional~~

   Deeply Bidirectional

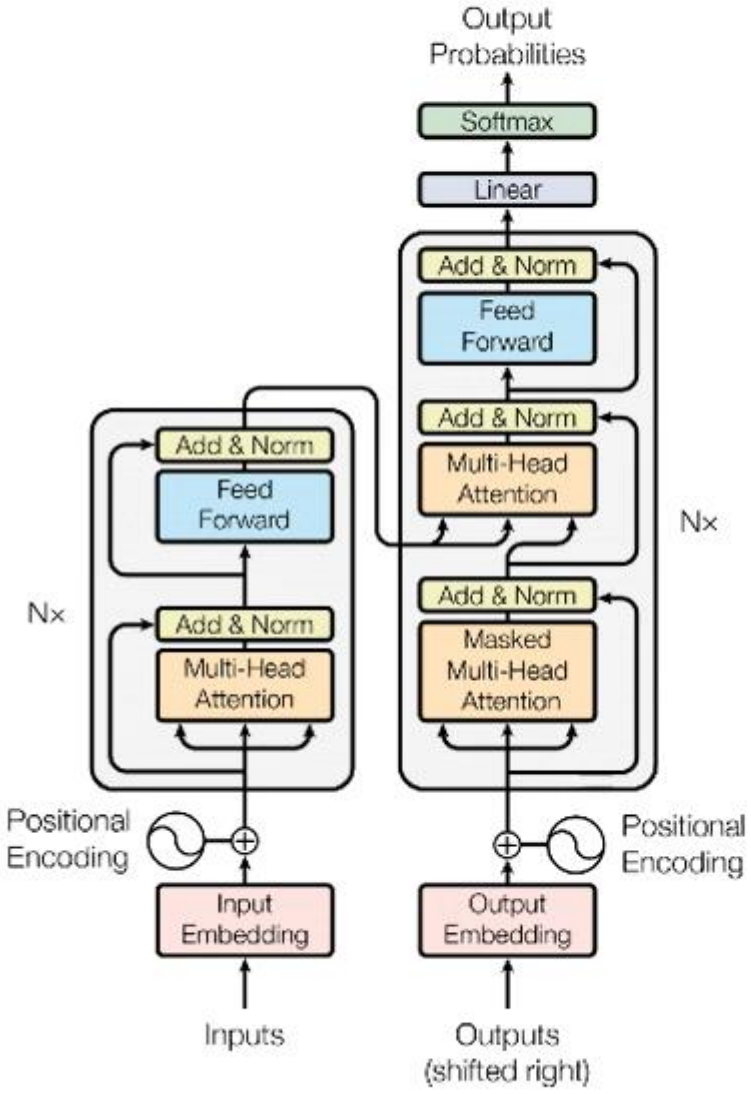

Transformer Flow

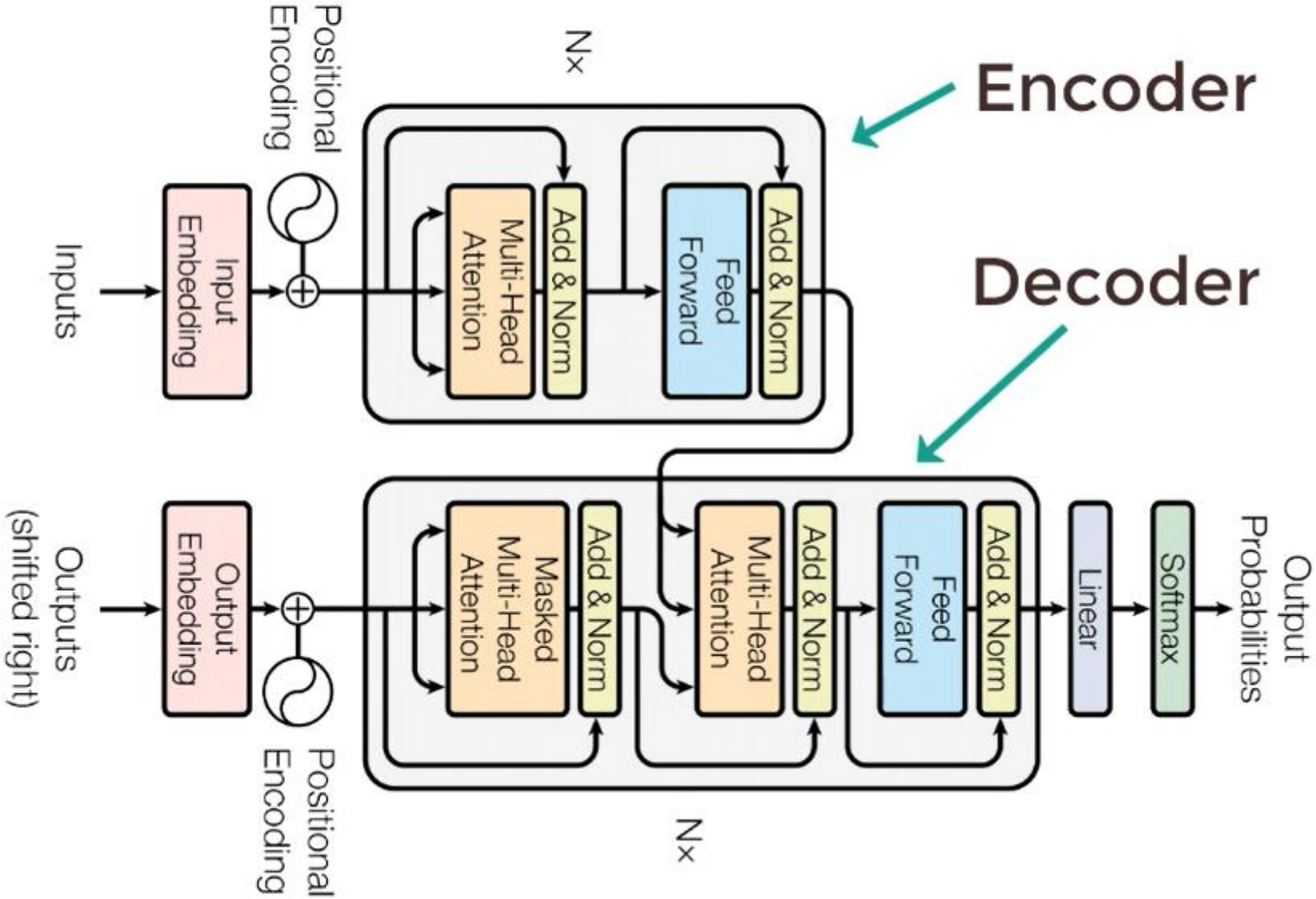

Transformer Flow

This
is
Amazing

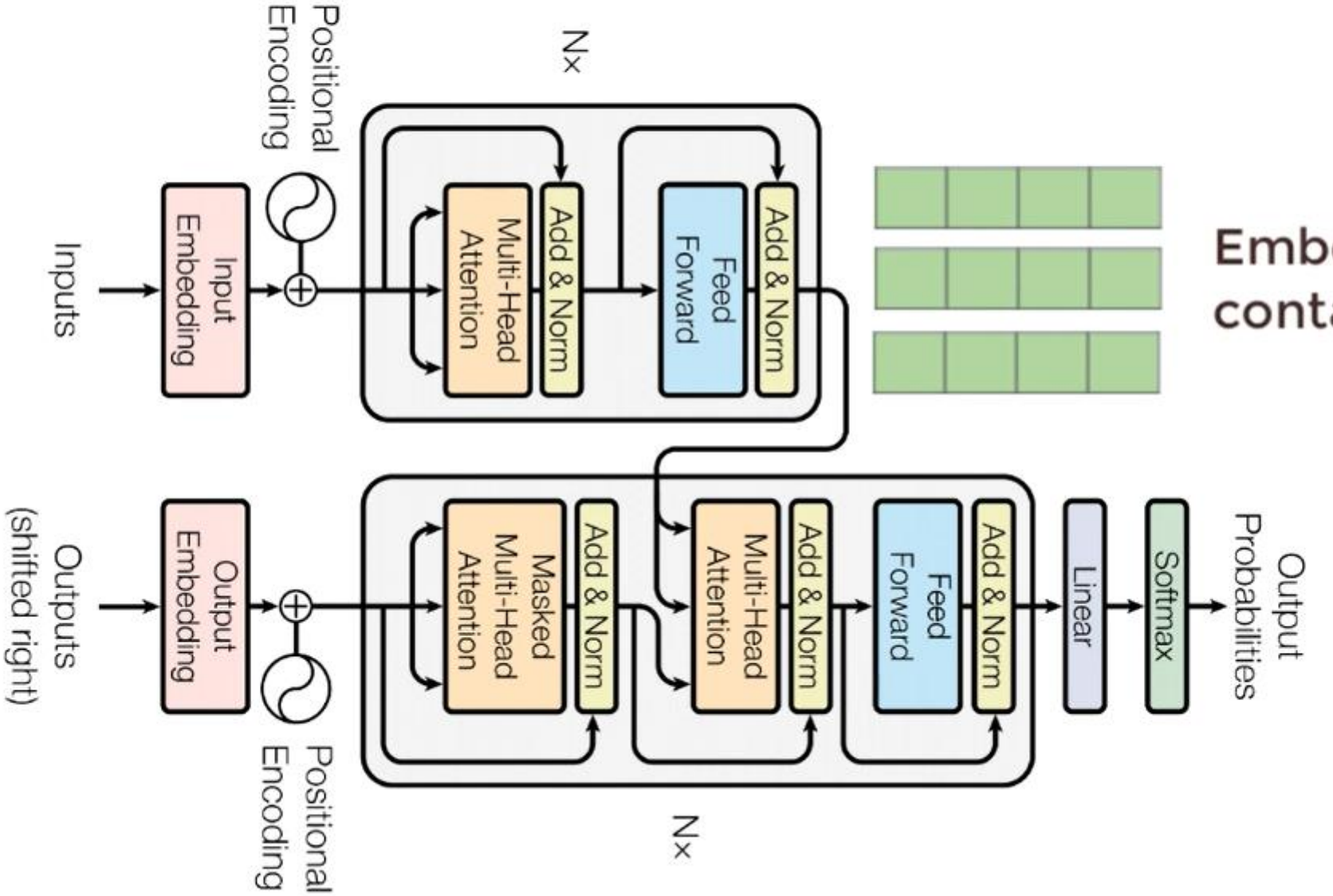

Embeddings that contain meaning

Transformer Flow

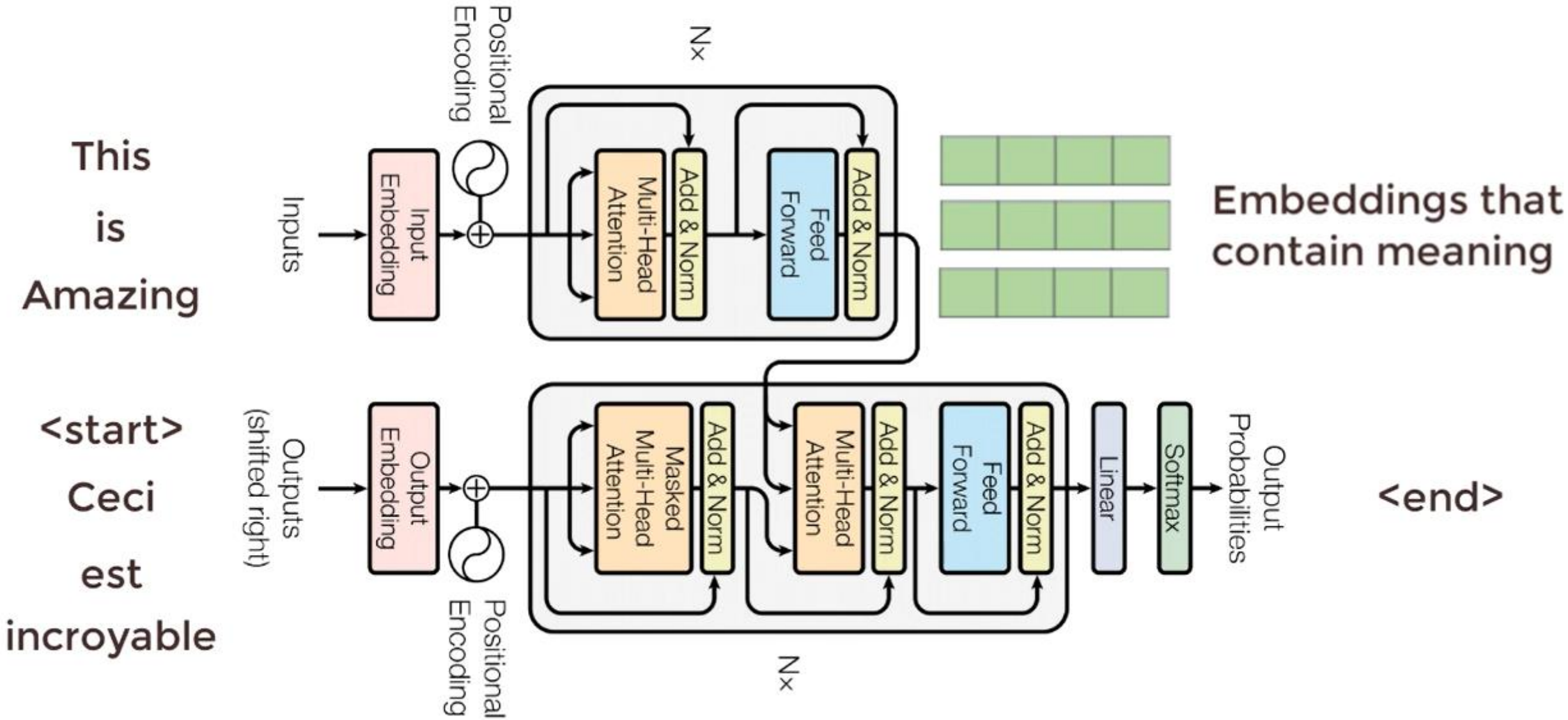

Transformer Flow

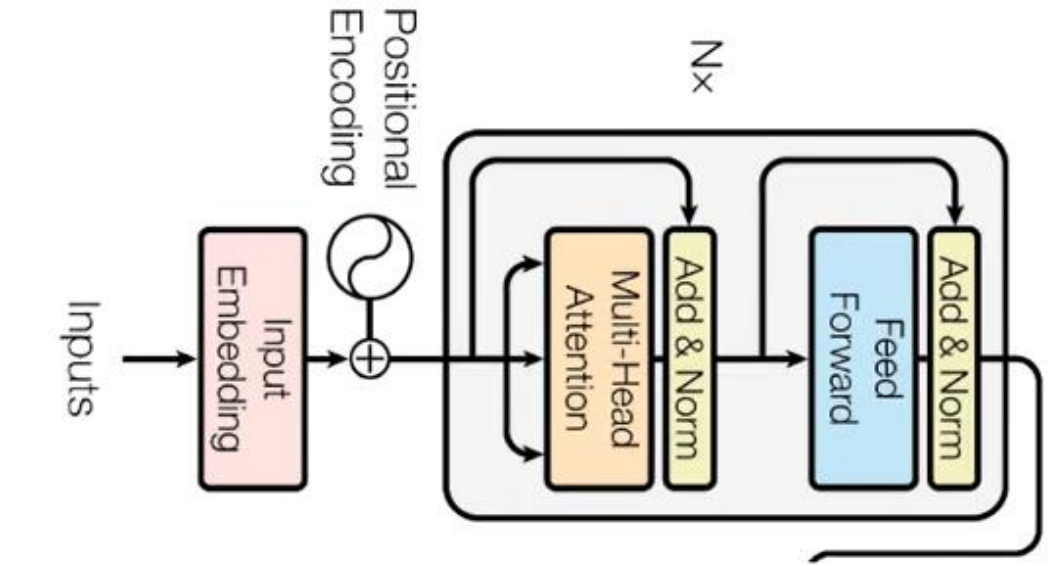

What is English? What is context?

What is language!

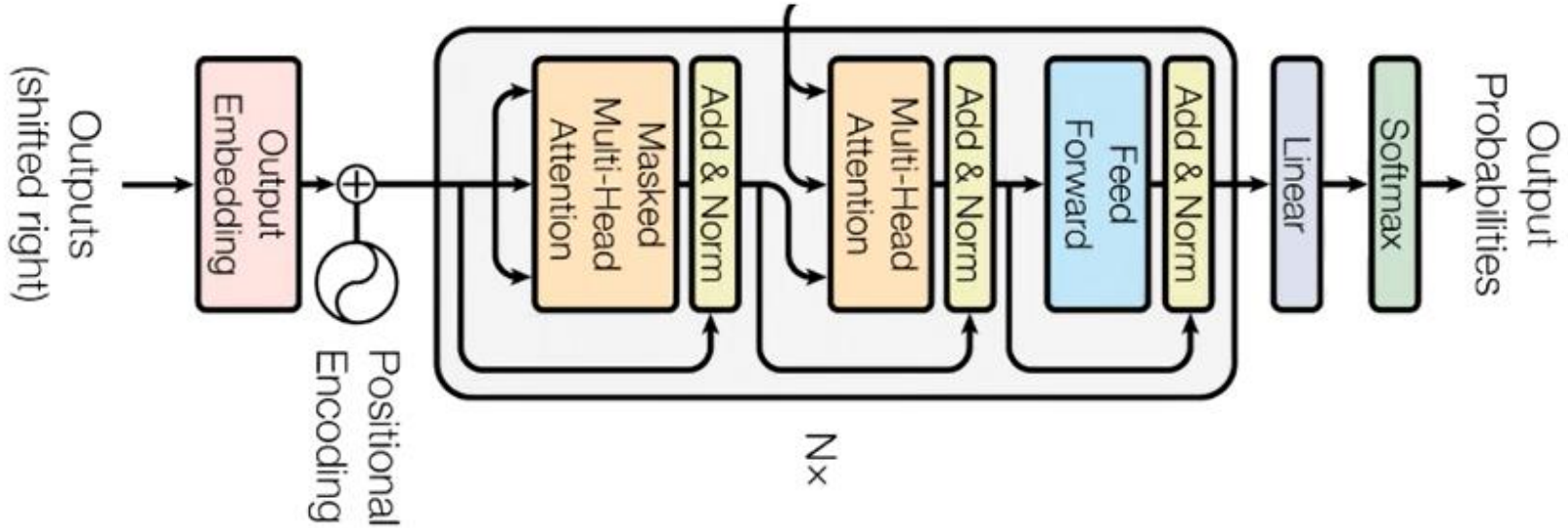

How to map English words to French words?

What is language!

Transformer Flow

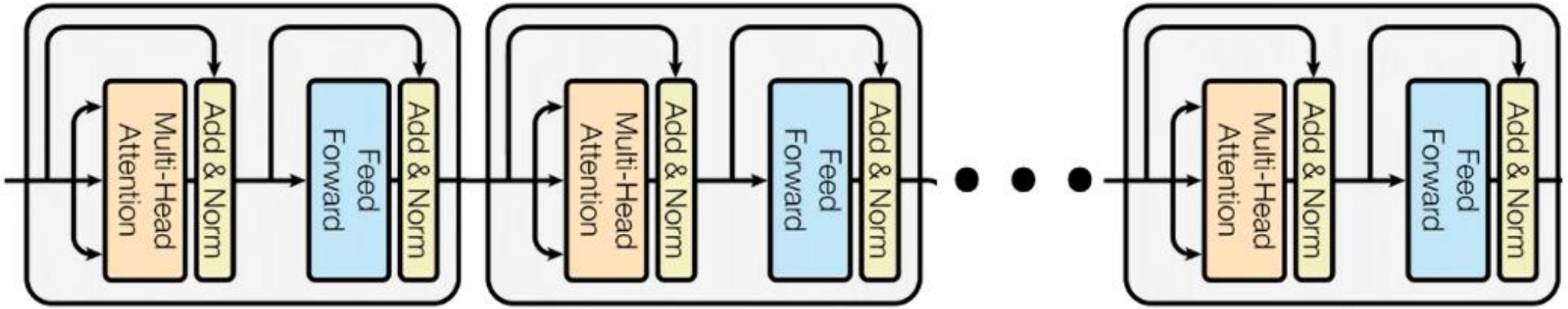

BERT

Bidirectional **E**ncoder **R**epresentation from **T**ransformers

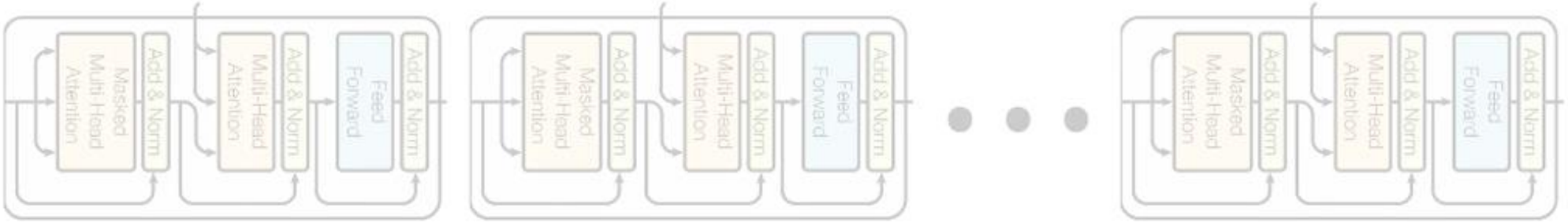

GPT

Bidirectional Encoder Representation from Transformers

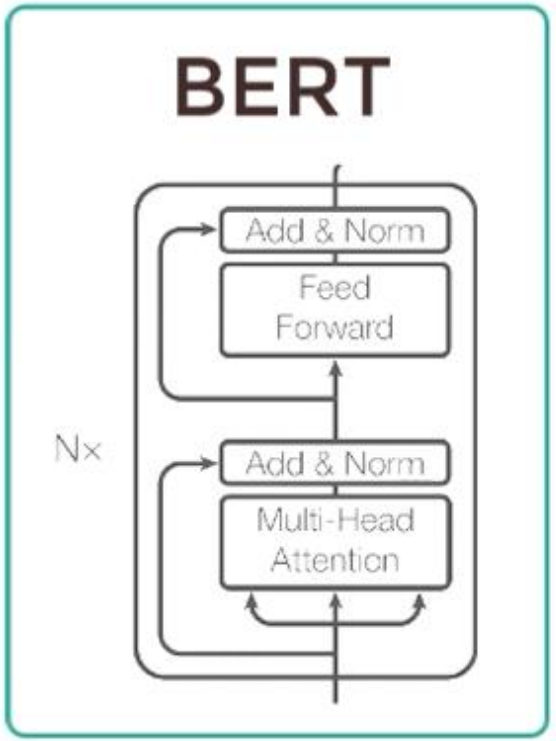

Problems to Solve

- Neural Machine Translation
- Question Answering
- Sentiment Analysis
- Text summarization

Needs Language understanding

How to solve Problems (BERT Training)

- Pretrain BERT to understand langauge
- Fine tune BERT to learn specific task

Bidirectional Encoder Representation from Transformers

Pretraining (Pass 1) : "What is language? What is context?"

Masked Language Model (MLM)

The [MASK1] brown fox [MASK2] over the lazy dog.

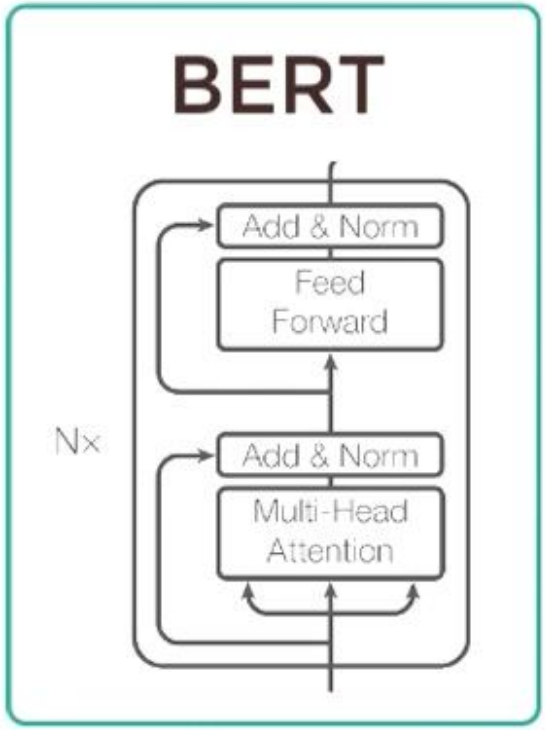

[MASK1] = quick
[MASK2]= jumped

Next Sentence Prediction (NSP)

Bidirectional Encoder Representation from Transformers

Pretraining (Pass 1) : "What is language? What is context?"

Masked Language Model (MLM)

The [MASK1] brown fox [MASK2] over the lazy dog.

Next Sentence Prediction (NSP)

A: Ajay is a cool dude.
B: He lives in Ohio

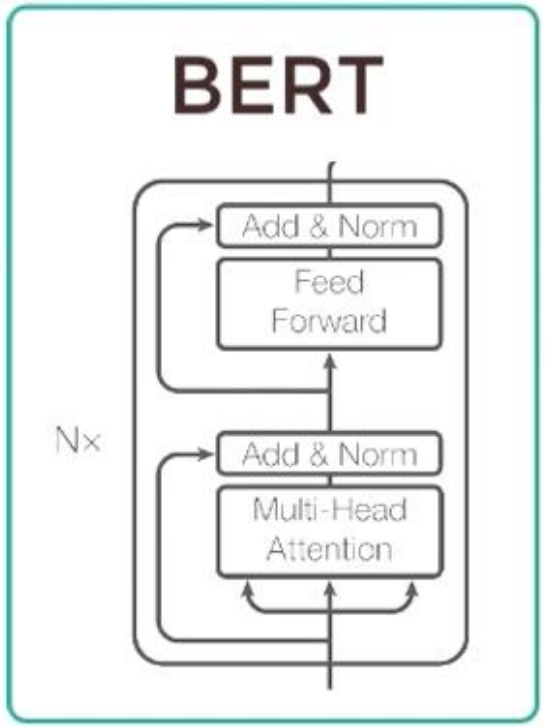

[MASK1] = quick
[MASK2]= jumped

Yes. Sentence B follows sentence A

Bidirectional Encoder Representation from Transformers

Fine Tuning (Pass 1): "How to use language for specific task?"

Fine tuned Q & A

Question

Passage

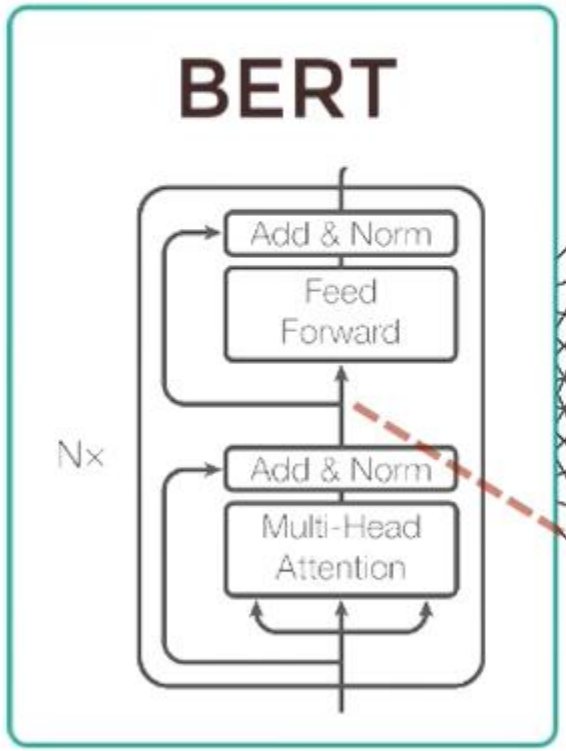

Learned From scratch

Answer

Fine Tuned

FAST!

Bidirectional Encoder Representation from Transformers

Pretraining (Pass 2)

Problems to train on simultaneously:

1. Masked Language Modeling (Mask LM)
2. Next Sentence Prediction (NSP)

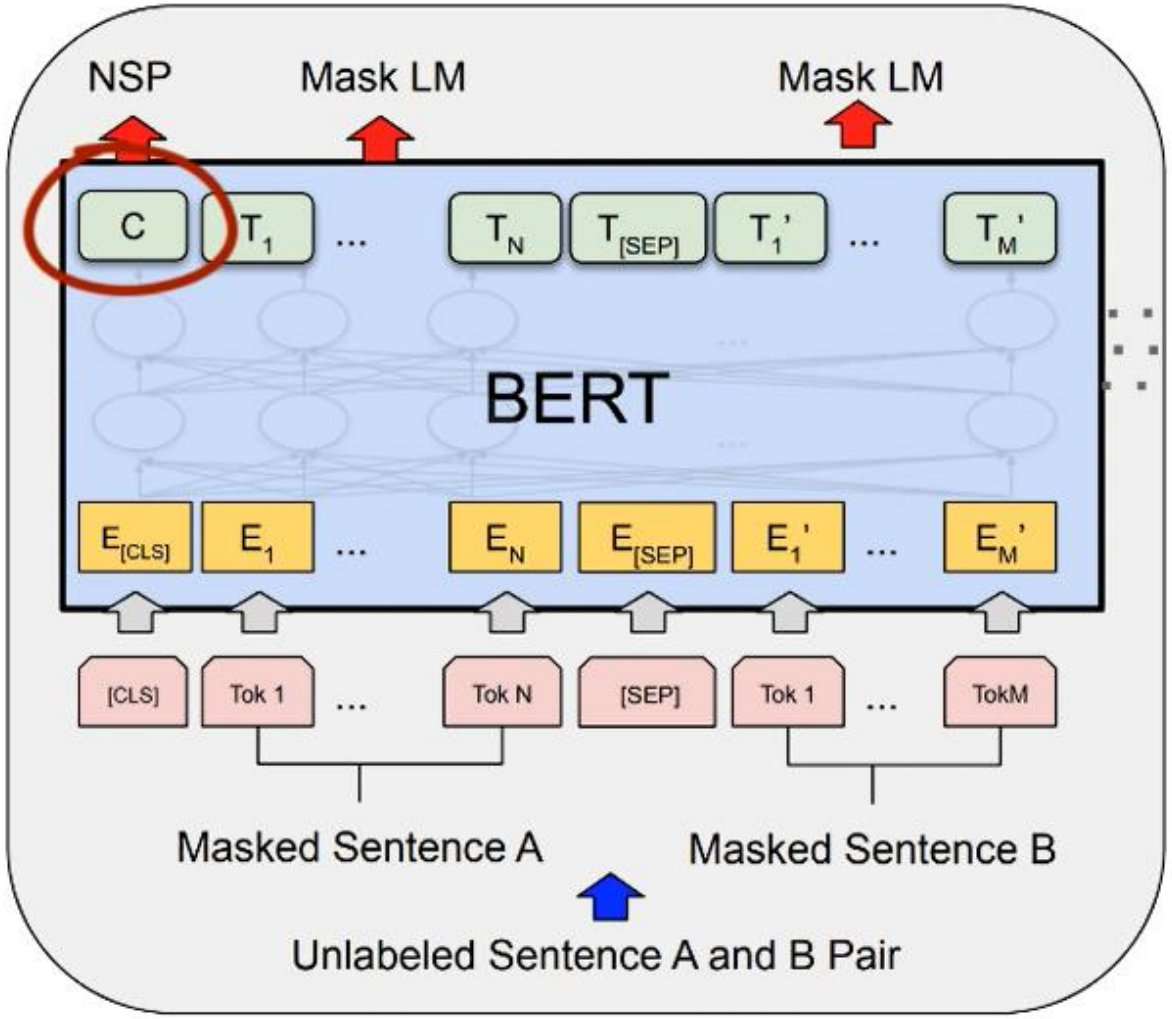

Source: BERT: Pre-training of deep bidirectional Transformers for language understanding (Devlin et al., 2019)

Bidirectional Encoder Representation from Transformers

Pretraining (Pass 2)

Problems to train on simultaneously:

1. Masked Language Modeling (Mask LM)
2. Next Sentence Prediction (NSP)

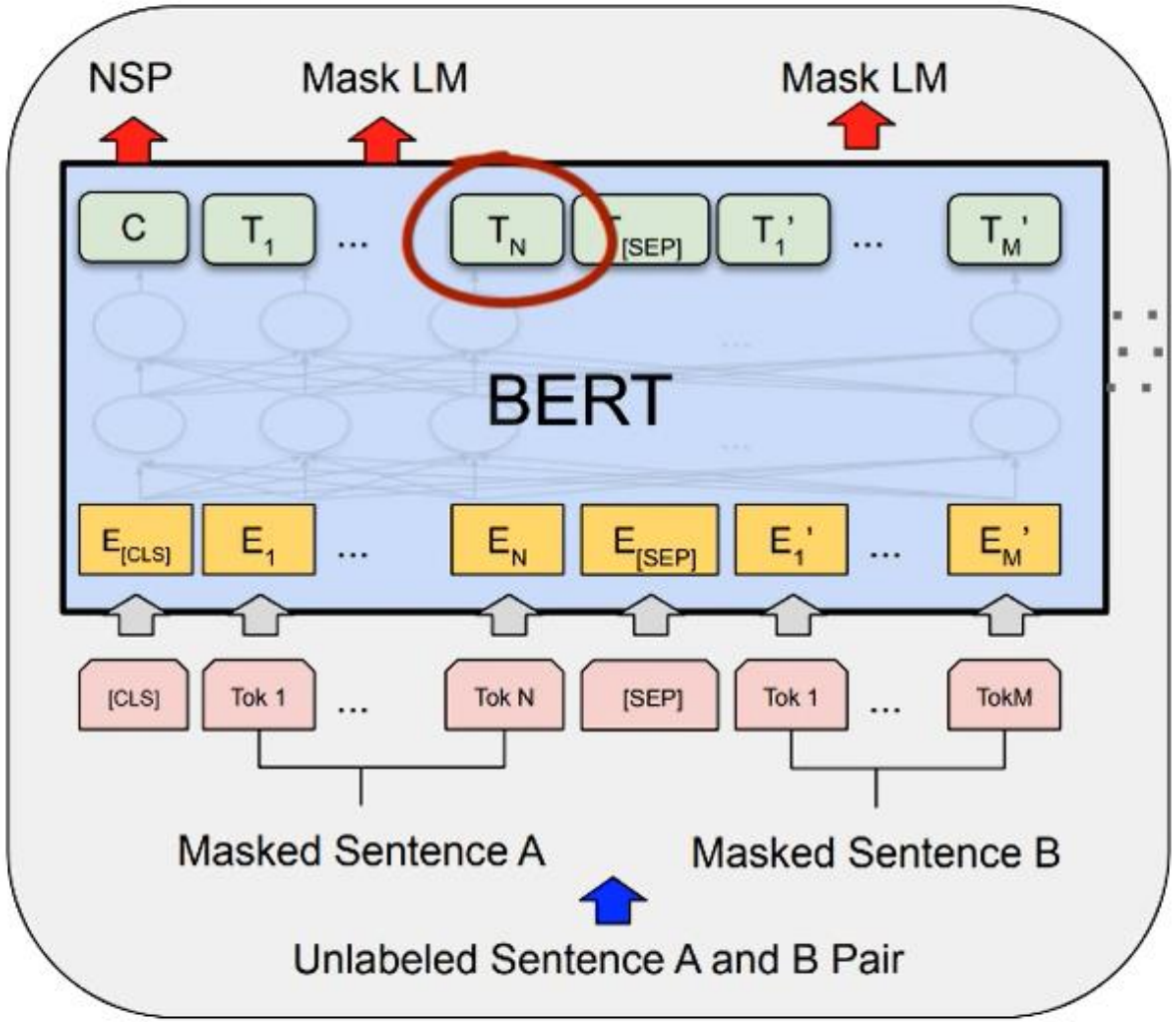

Source: BERT: Pre-training of deep bidirectional Transformers for language understanding (Devlin et al., 2019)

Bidirectional Encoder Representation from Transformers

Fine Tuning (Pass 2)

Change output to display text in which answer exists

Change inputs to take in Question, Passage

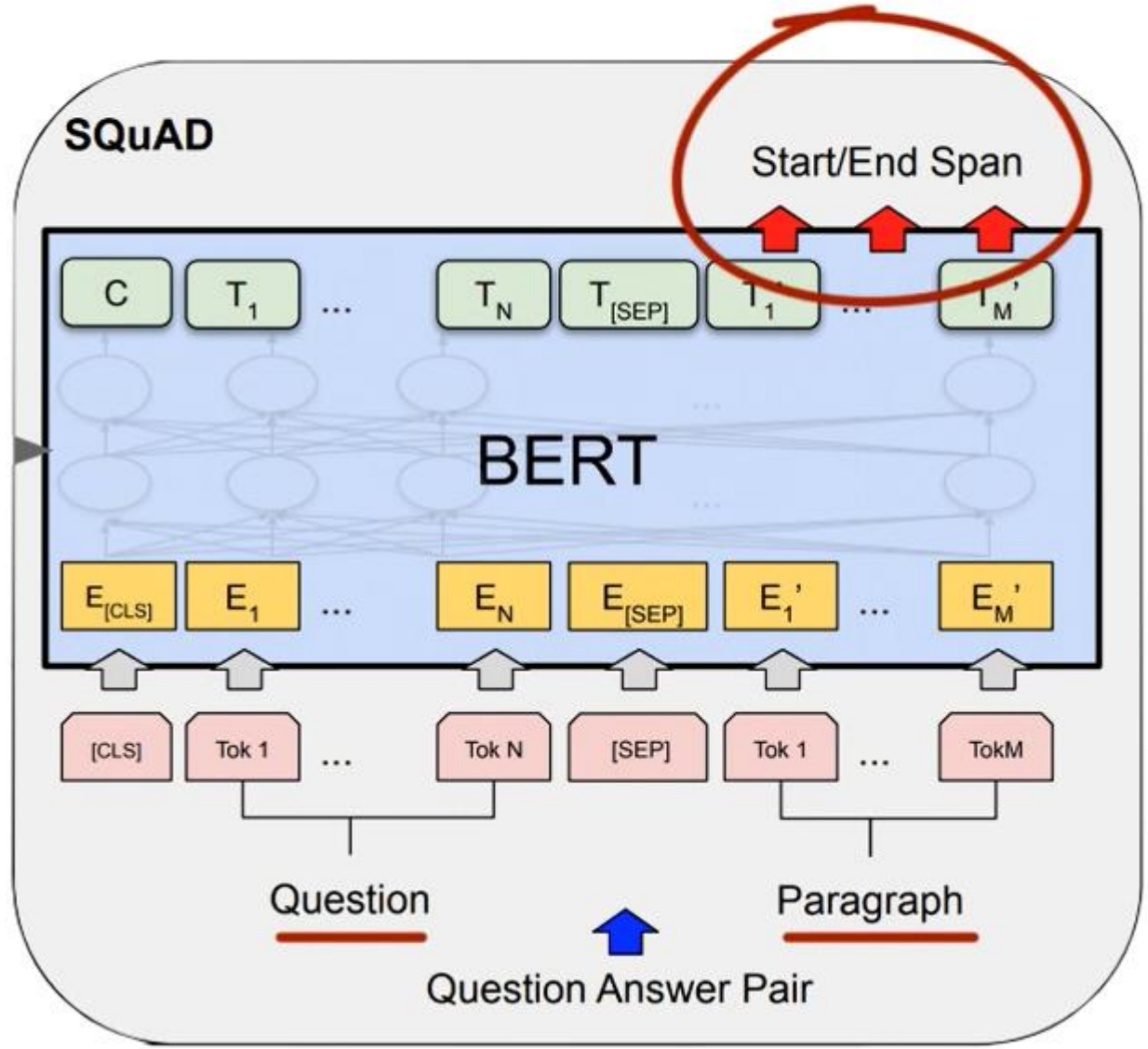

Bidirectional Encoder Representation from Transformers

Pretraining (Pass 3)

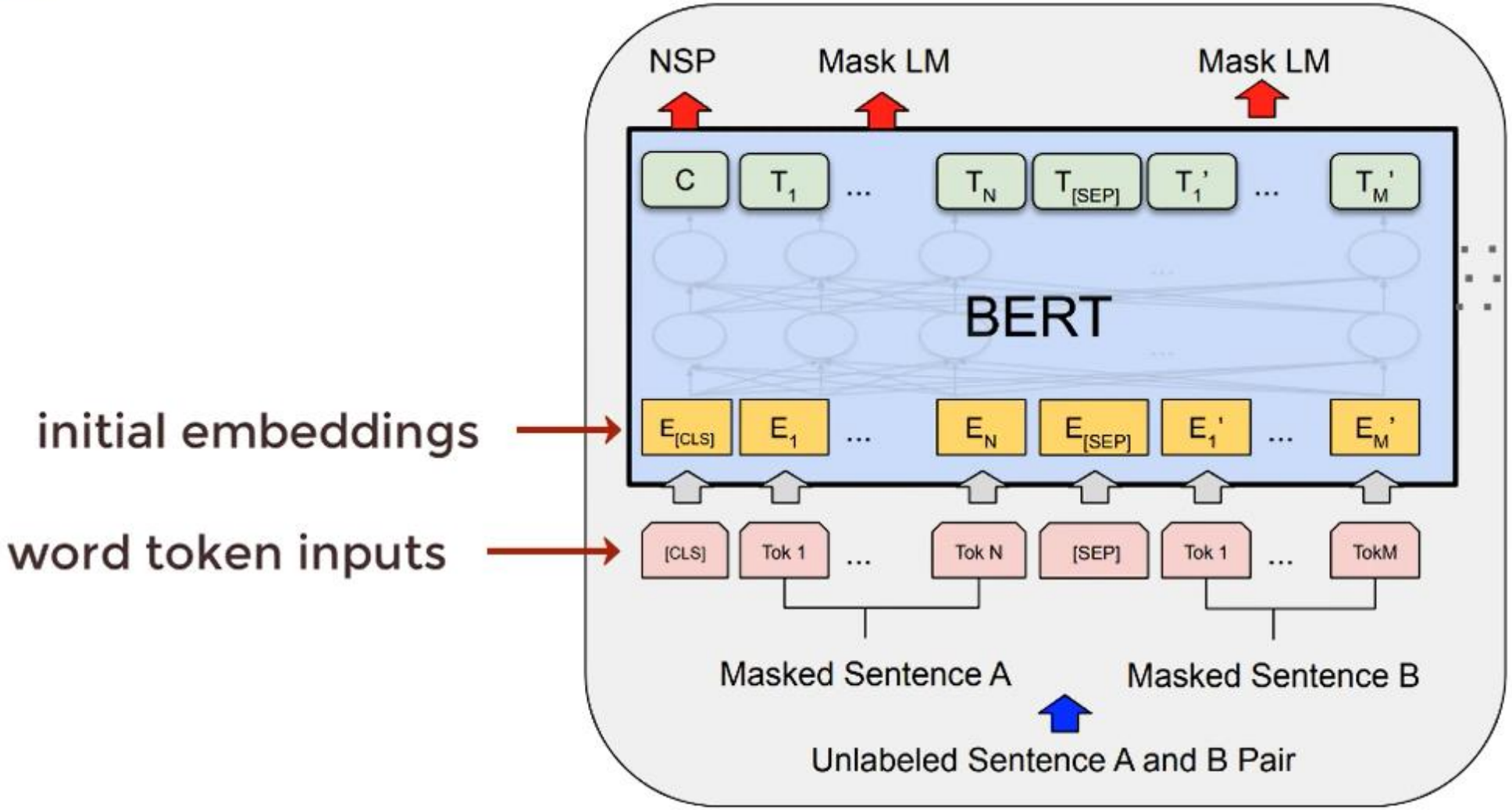

Bidirectional Encoder Representation from Transformers

Pretraining (Pass 3)

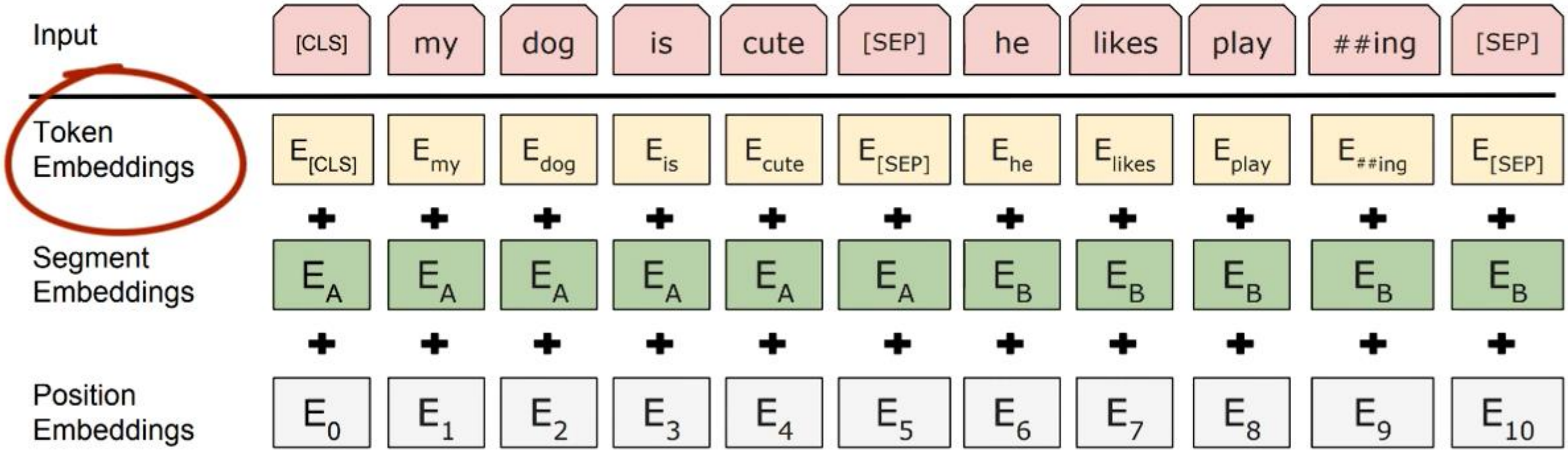

"WordPieces" - 30K vocabulary

Bidirectional Encoder Representation from Transformers

Pretraining (Pass 3)

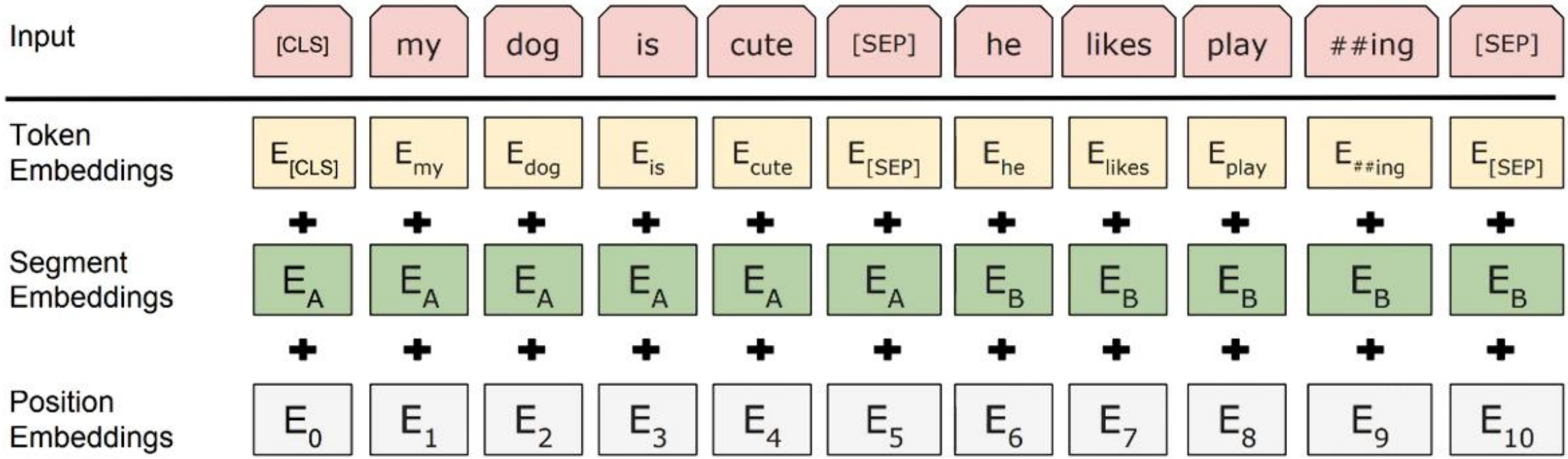

Segment + Position embeddings add “ordering” for inputs

Bidirectional Encoder Representation from Transformers

Pretraining (Pass 3)

Word vectors T_i have the same size.

Word vectors T_i are generated simultaneously

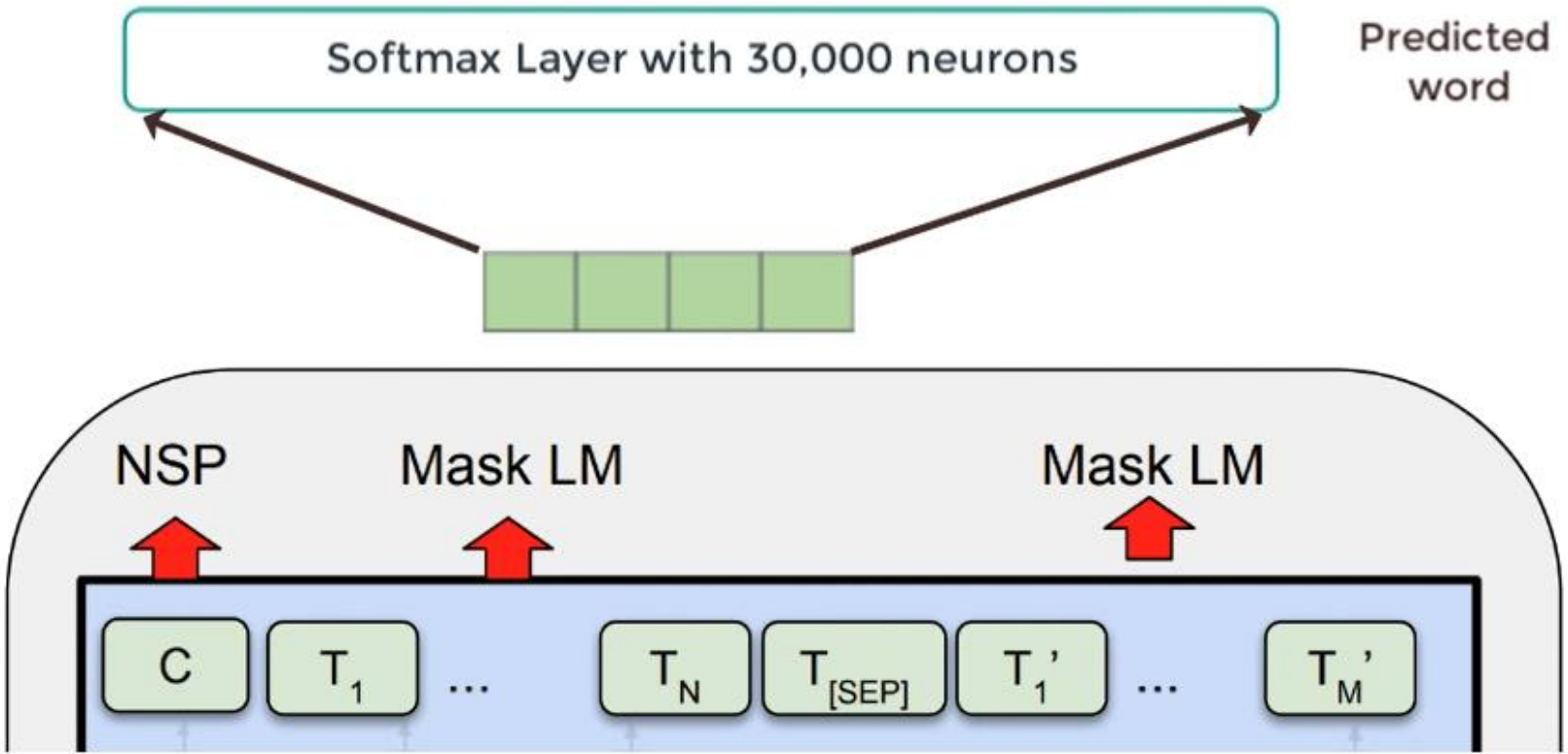

Bidirectional Encoder Representation from Transformers

Pretraining (Pass 3)

Word vectors T_i have the same size.

Word vectors T_i are generated simultaneously

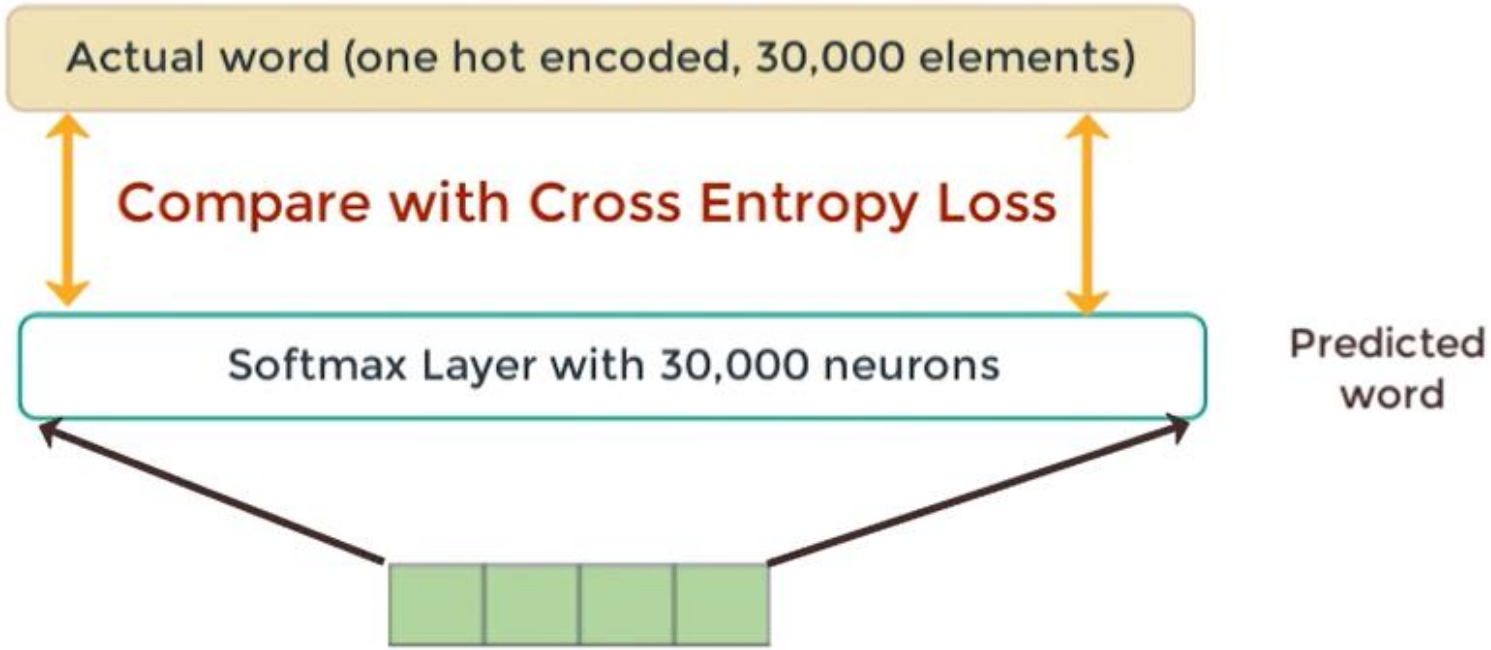

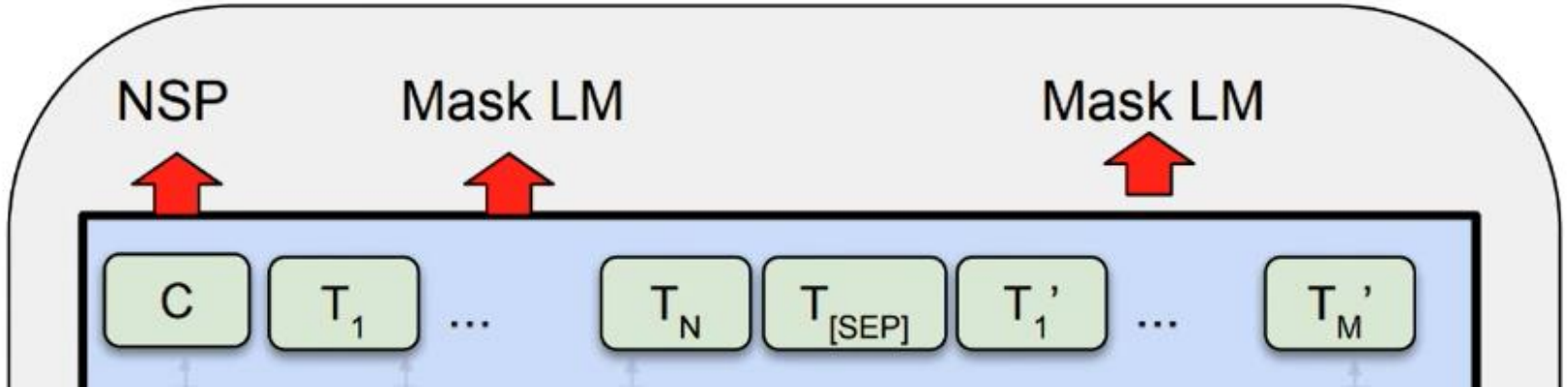

Bidirectional Encoder Representation from Transformers

Pretraining (Pass 3)

Word vectors T_i have the same size.

Word vectors T_i are generated simultaneously

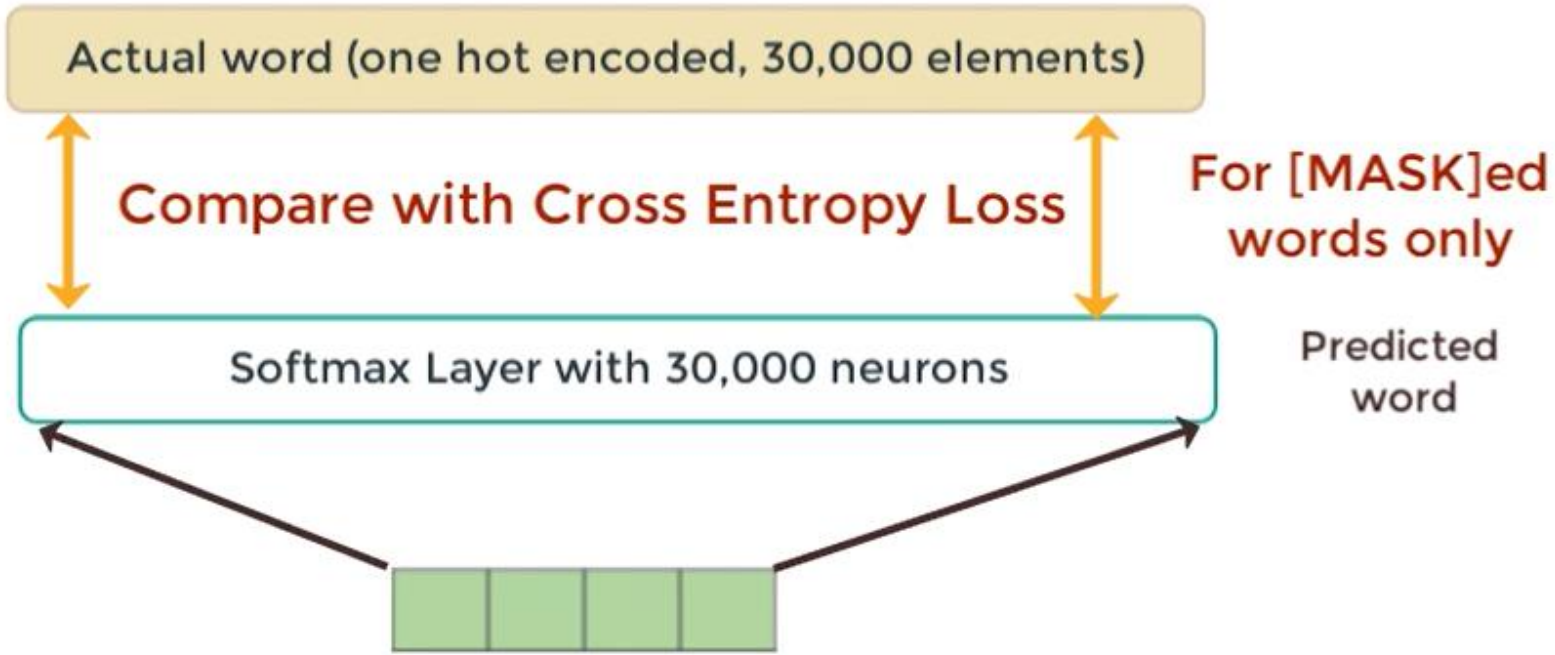

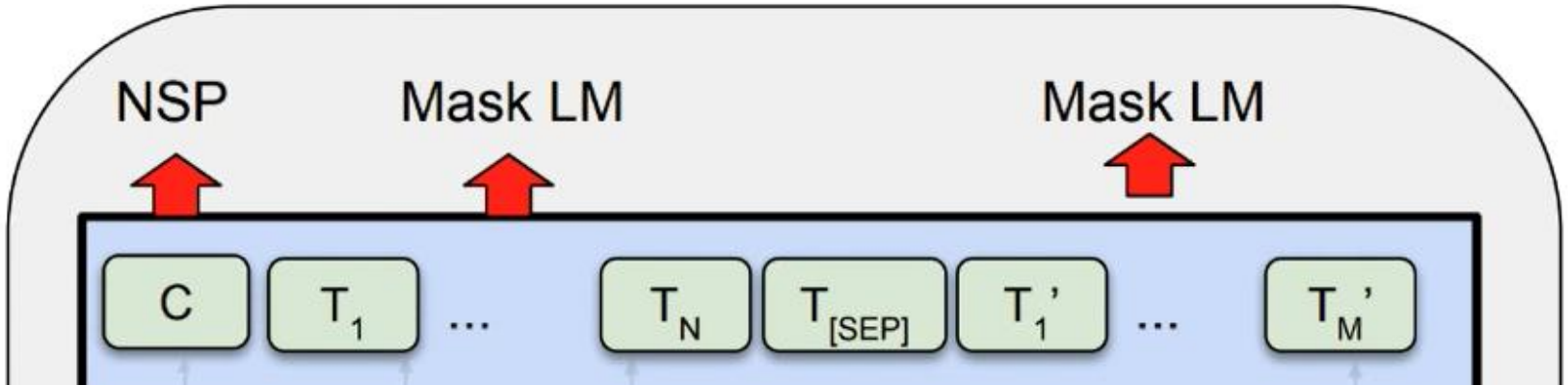

Bidirectional Encoder Representation from Transformers

Pretraining (Summary)

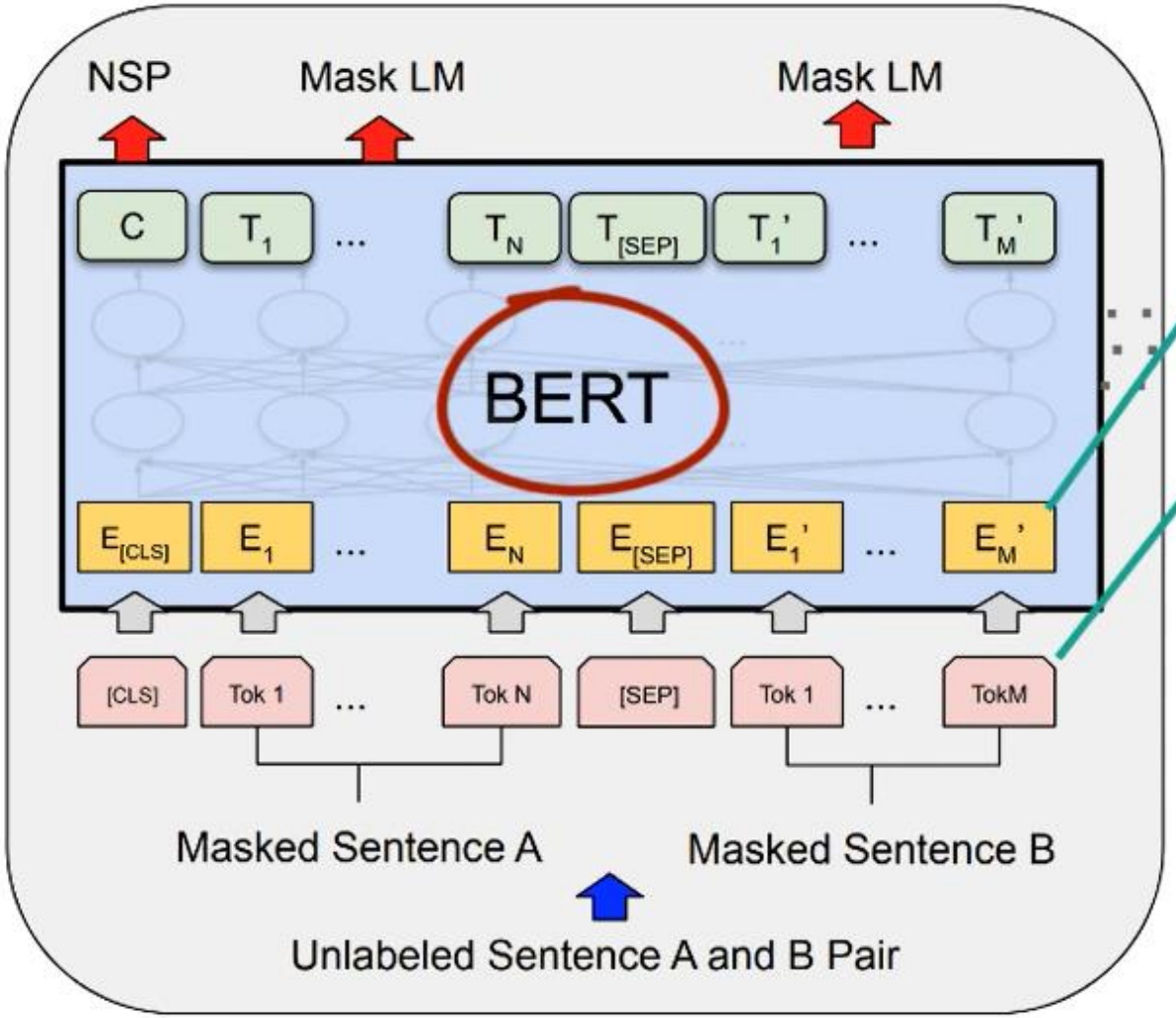

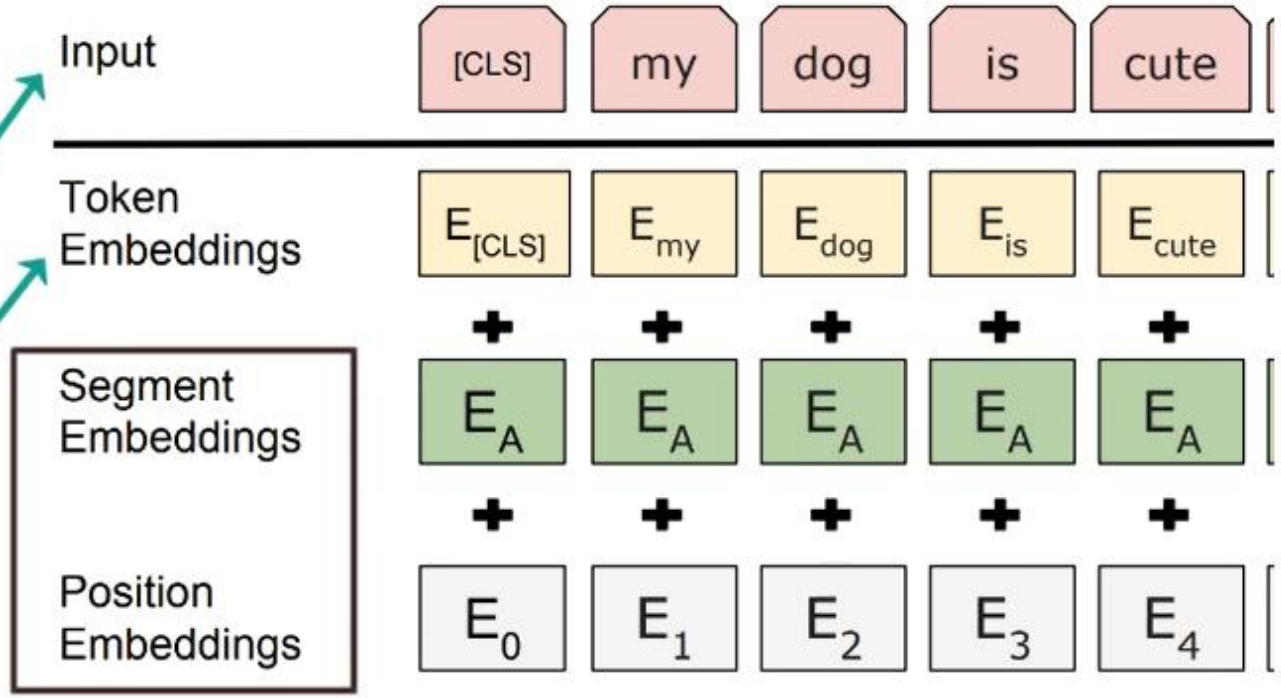

Bidirectional Encoder Representation from Transformers

Pretraining (Summary)

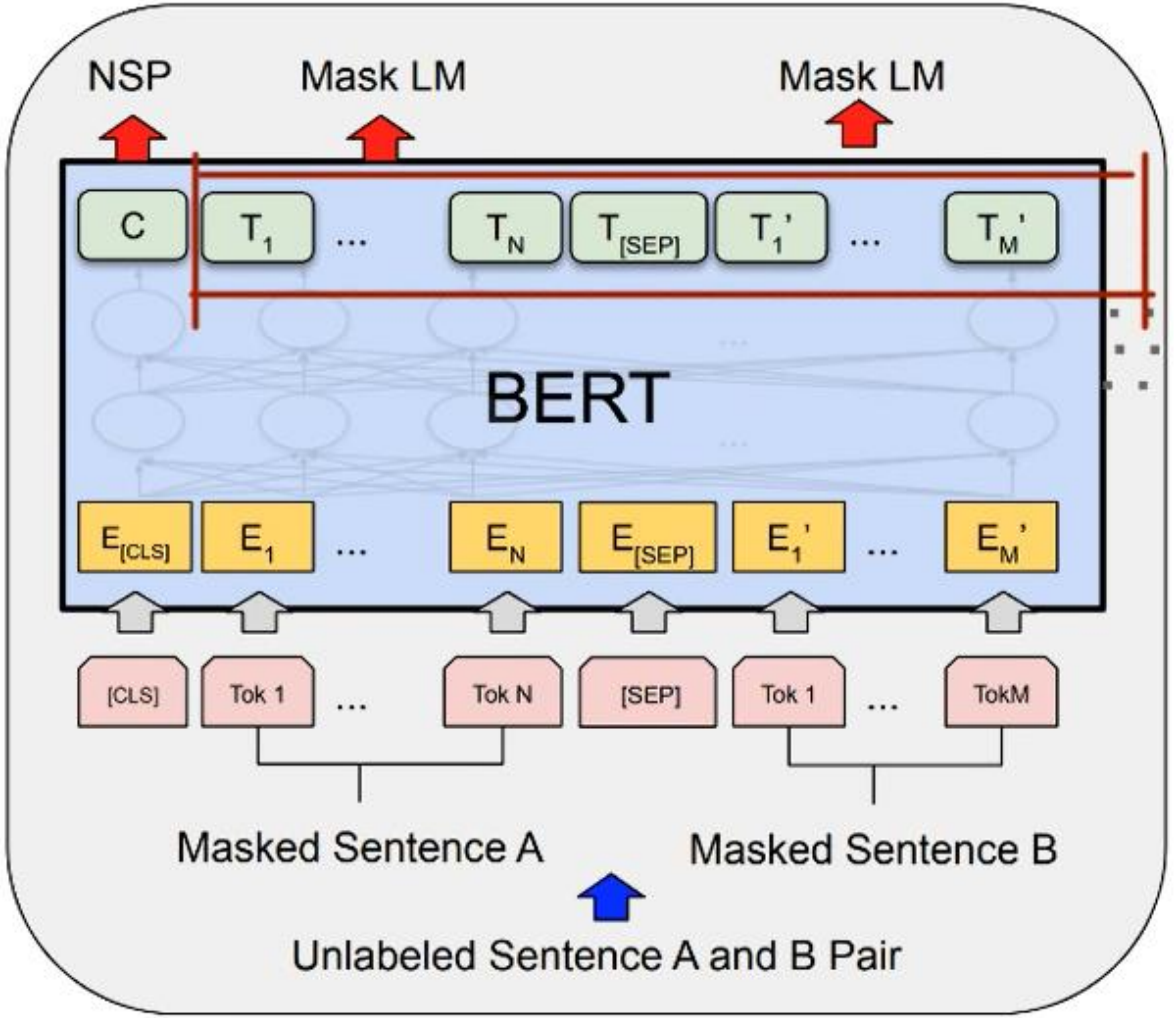

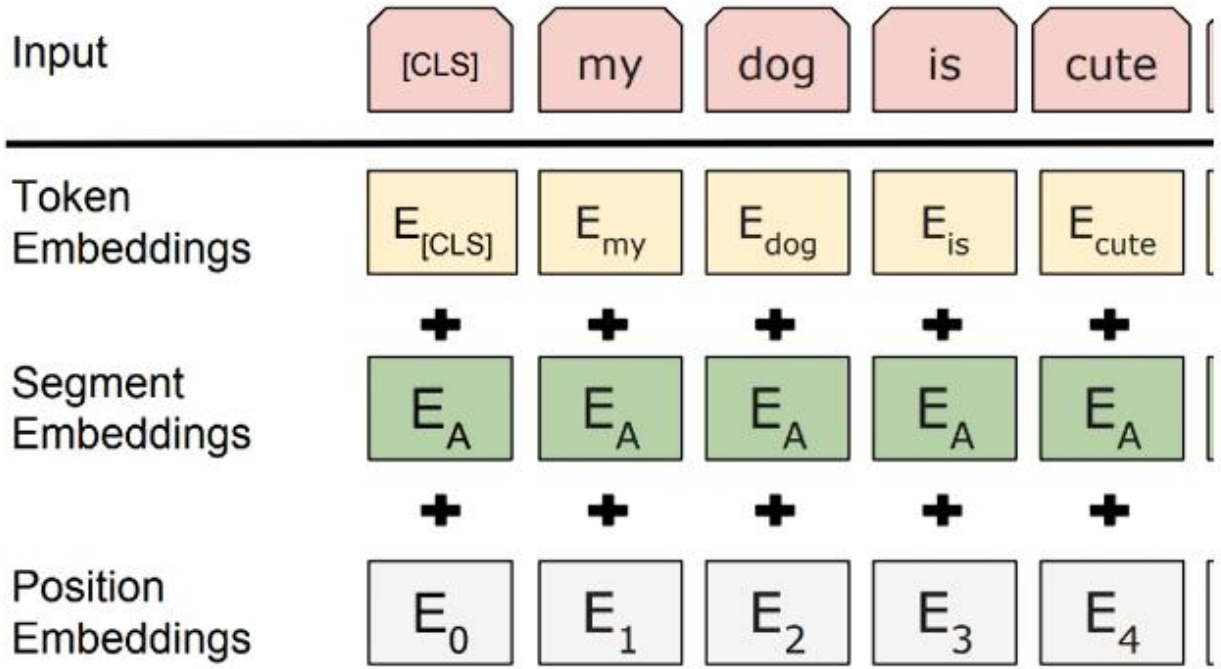

Bidirectional Encoder Representation from Transformers

Pretraining (Summary)

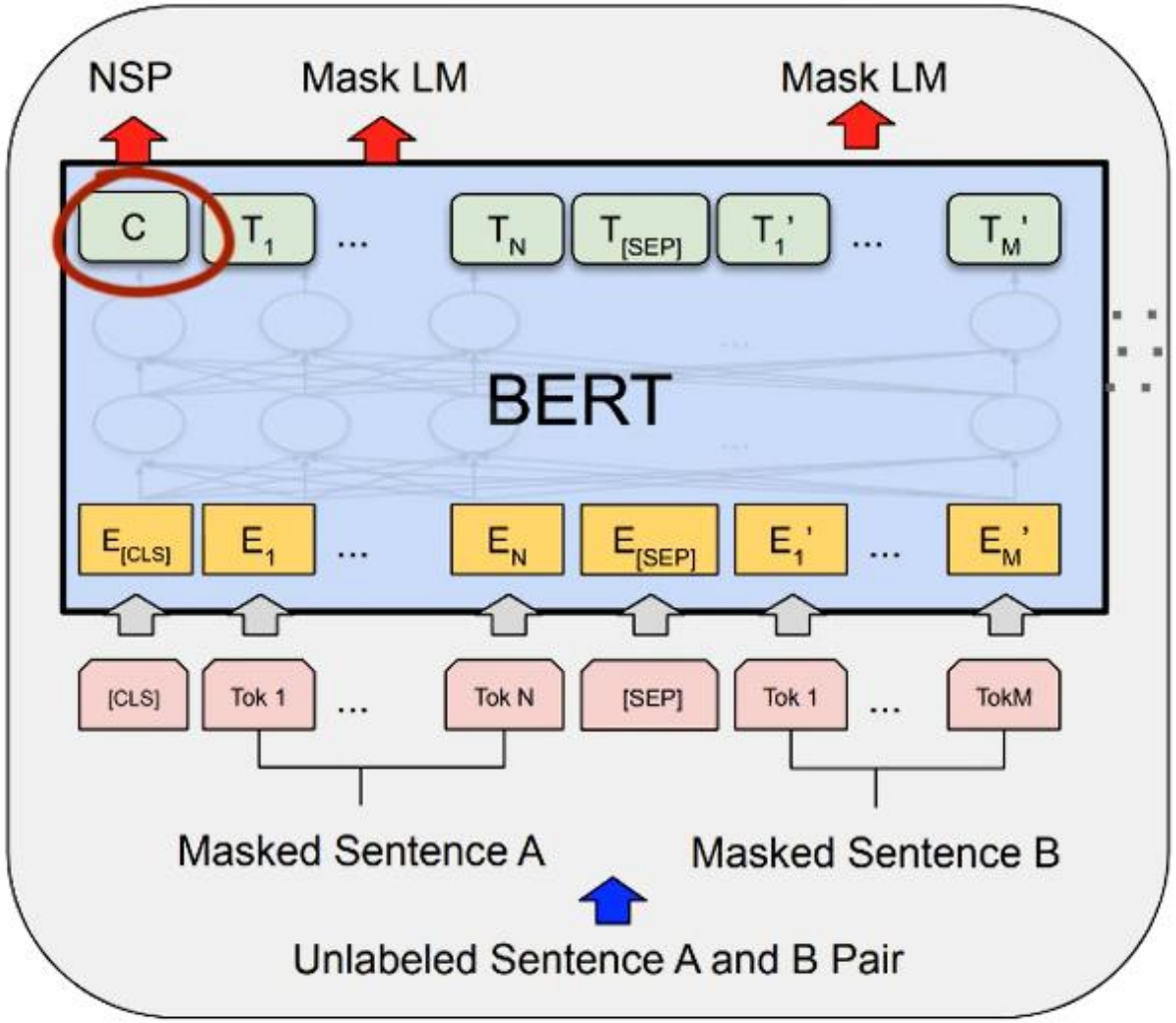

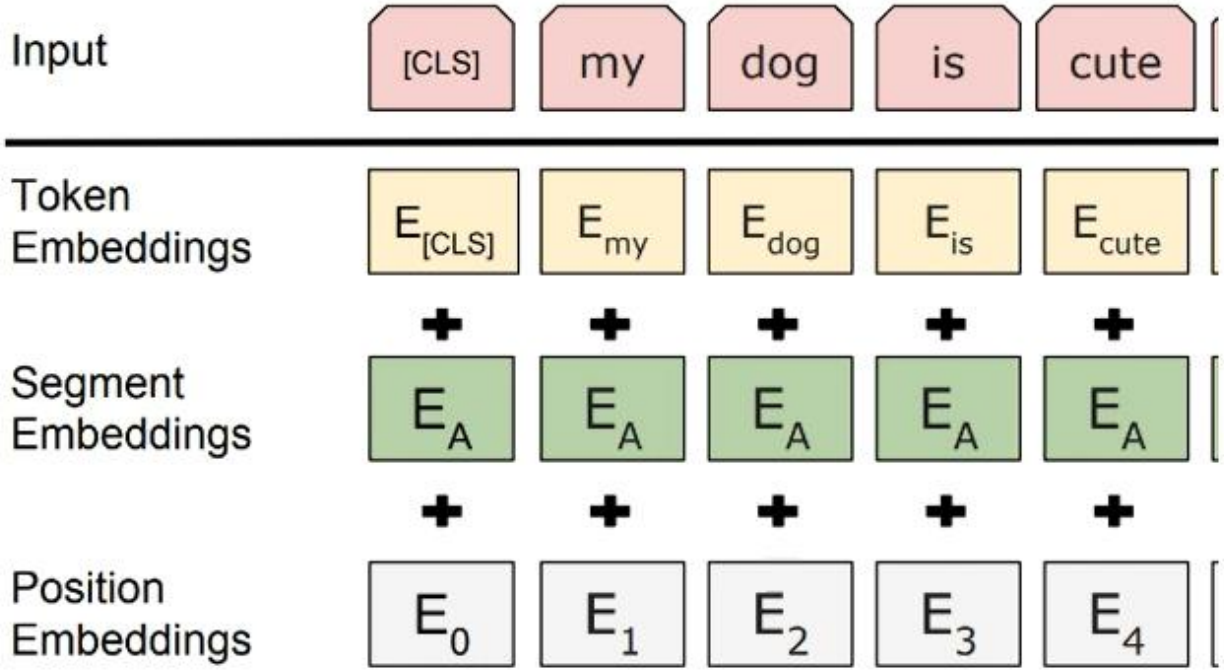

Bidirectional Encoder Representation from Transformers

Pretraining (Summary)

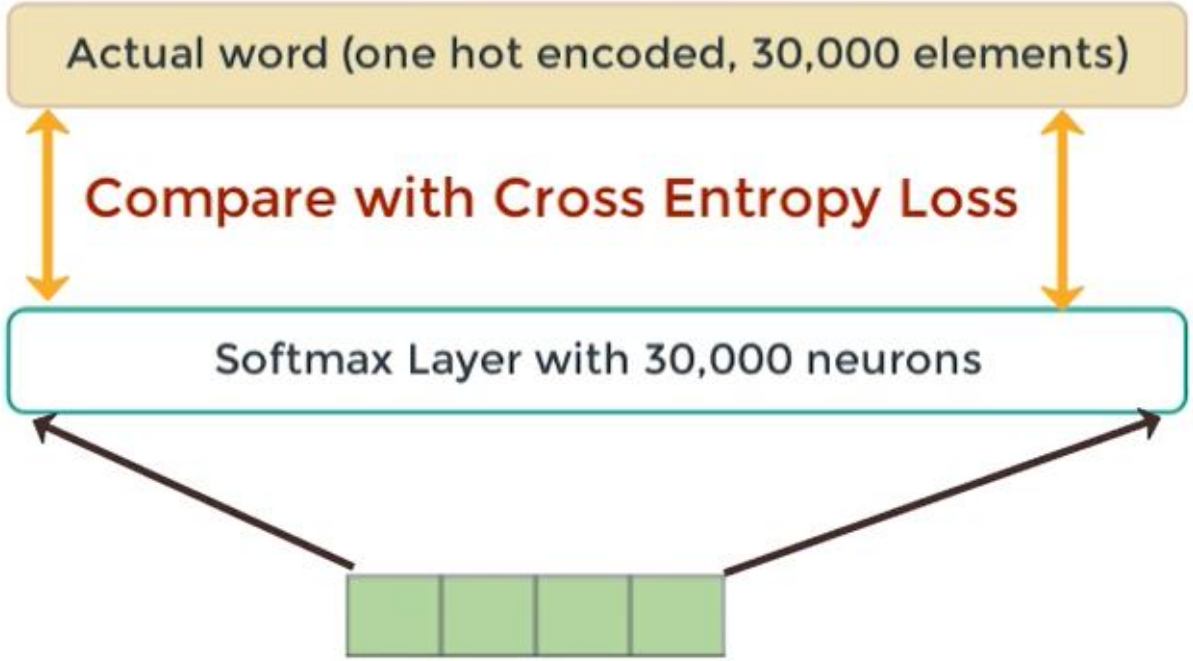

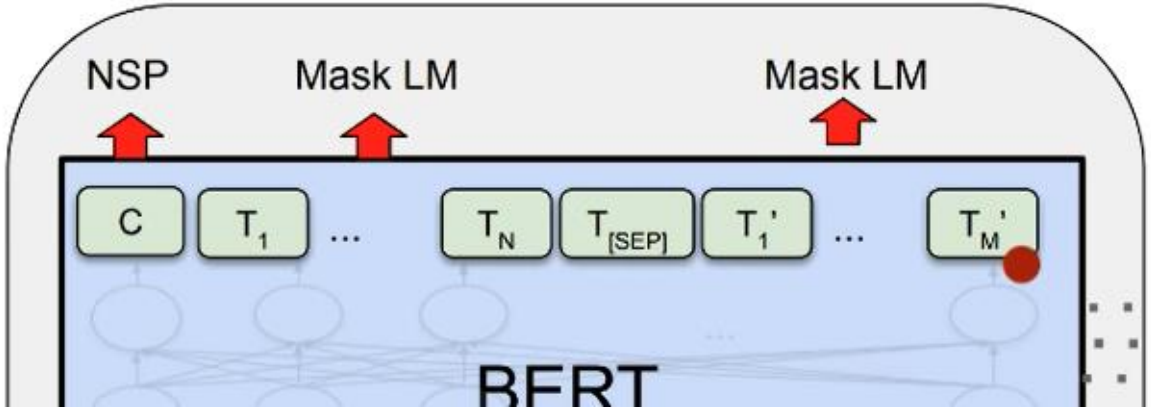

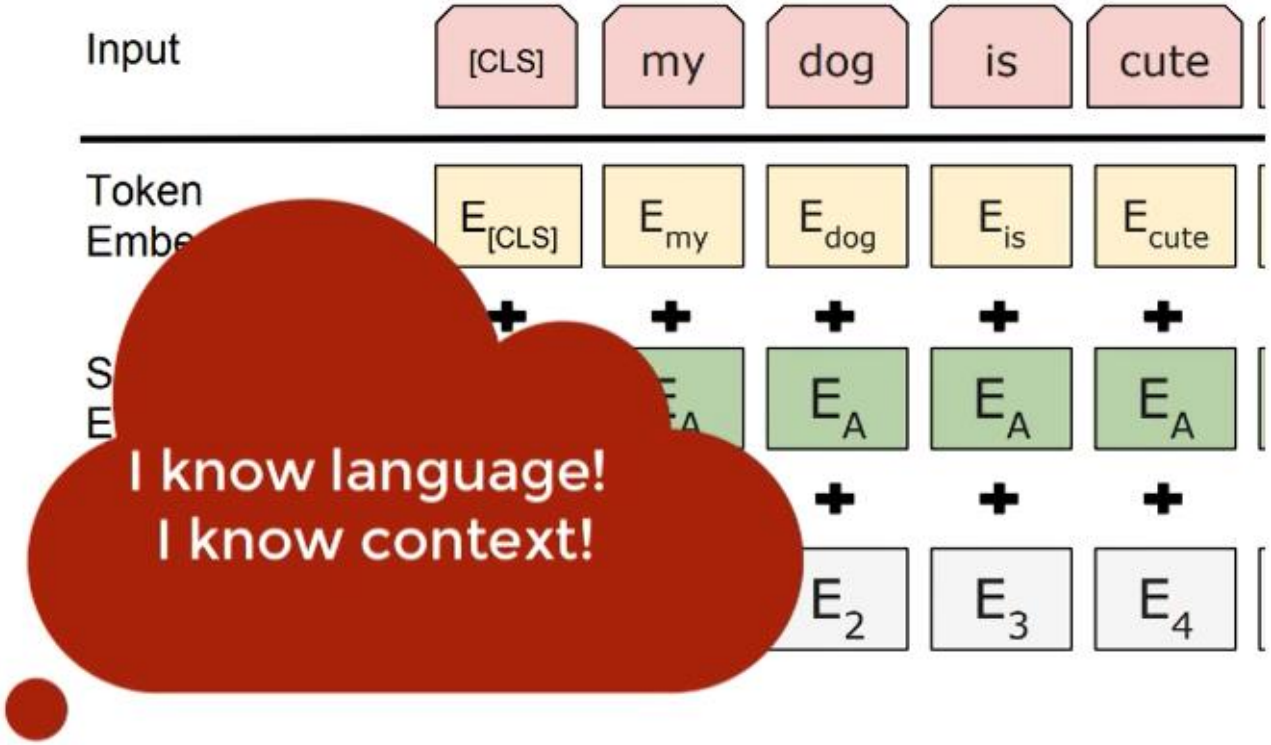

Bidirectional Encoder Representation from Transformers

Fine Tuning (Summary)

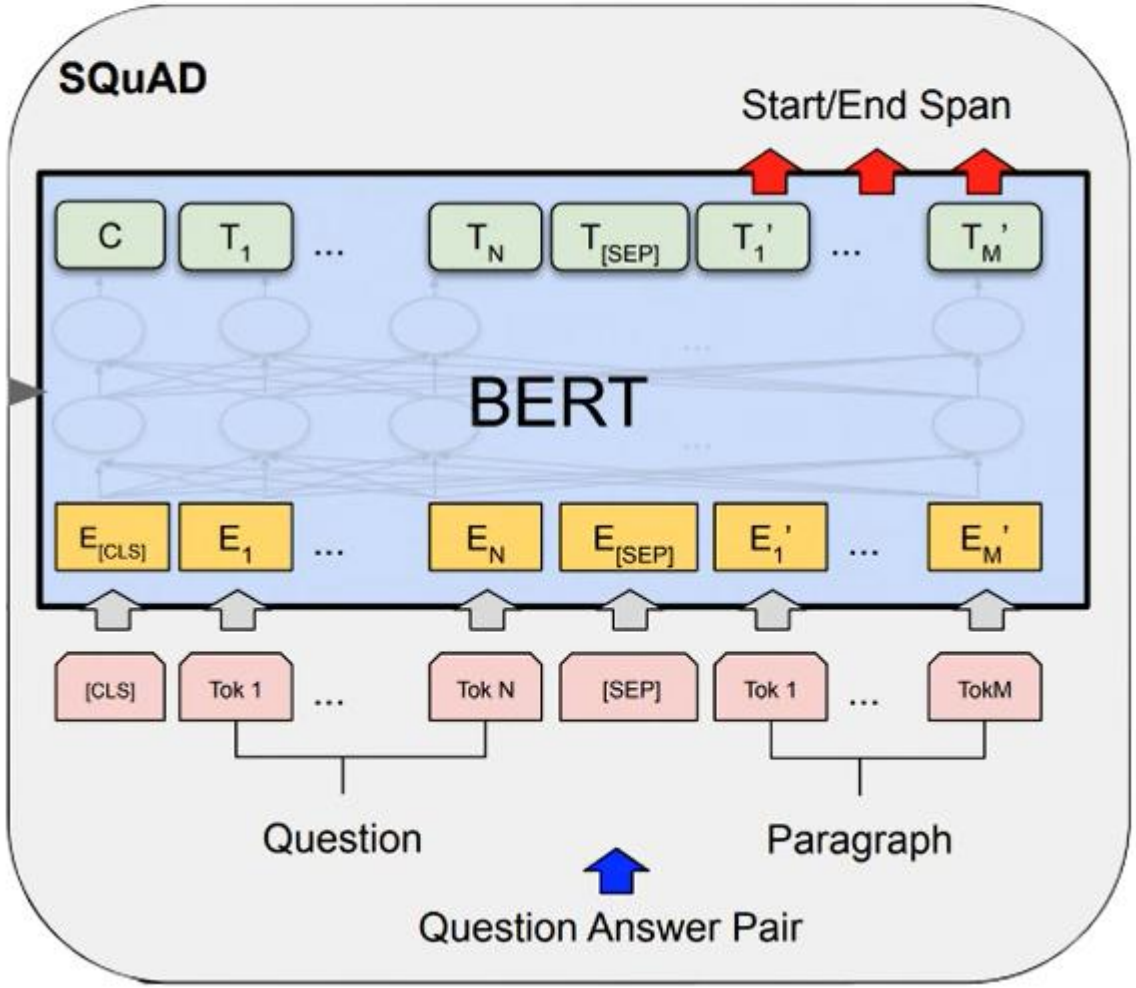

"Stanford Question & Answer Dataset"

- 30 minute training on single cloud TPU with 91% F1 score.

Bidirectional Encoder Representation from Transformers

Performance

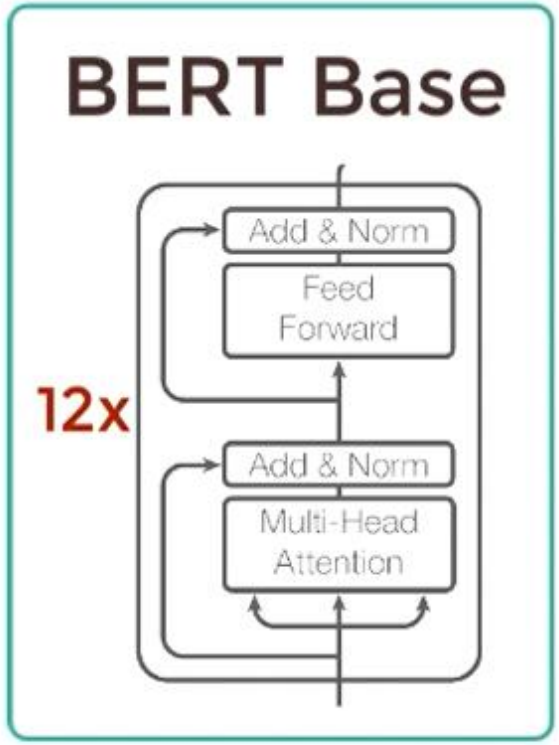

110M Parameters

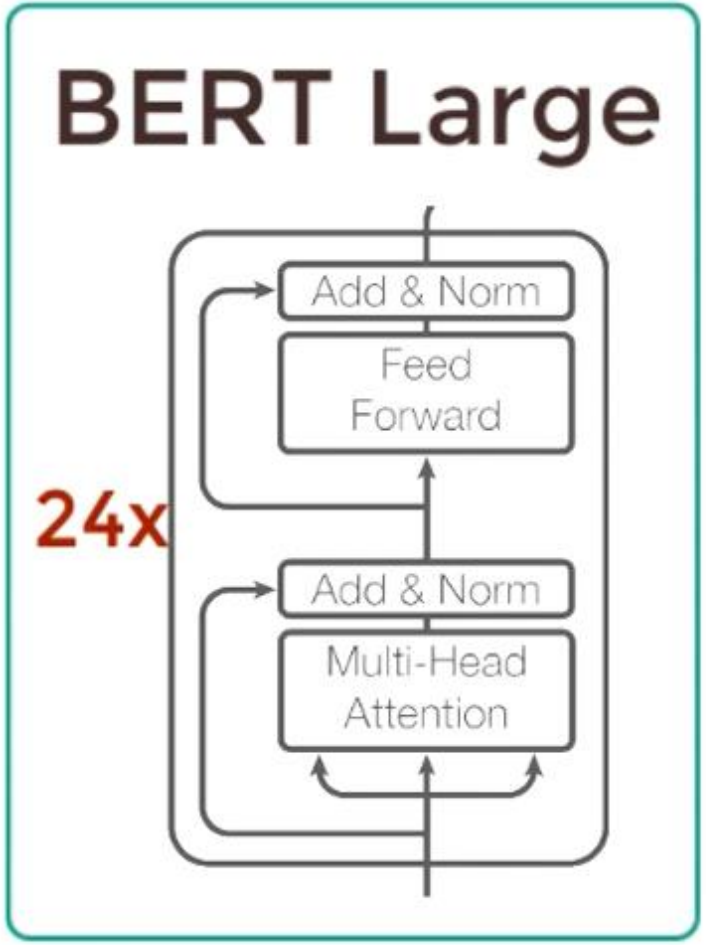

340M Parameters